50-B-MLPCU6254S-ASY

50-B-MLPCU6254S-ASY

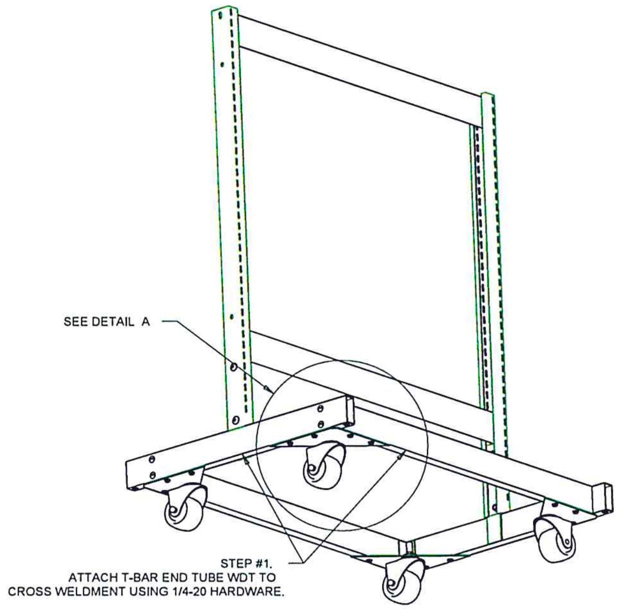

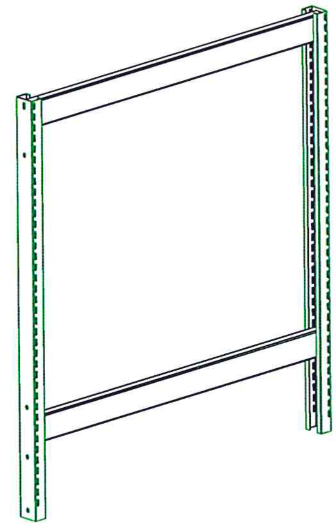

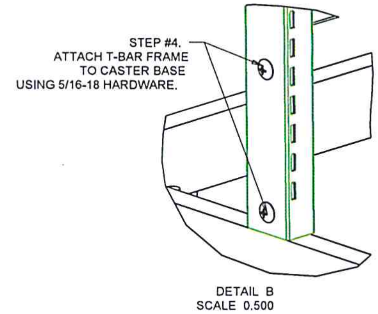

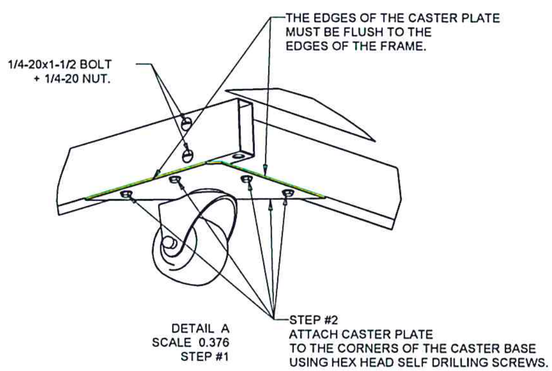

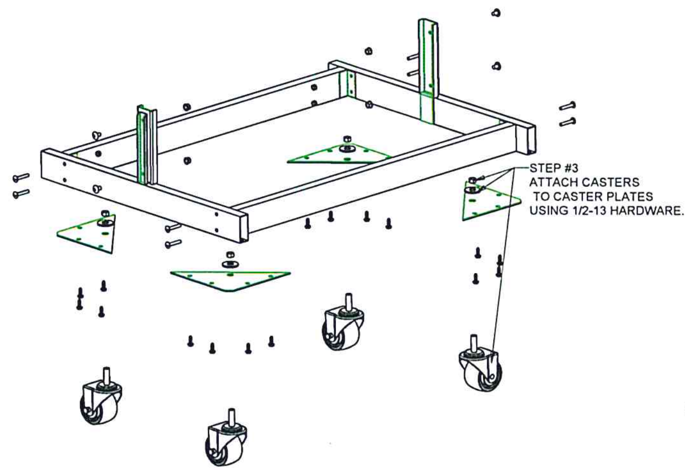

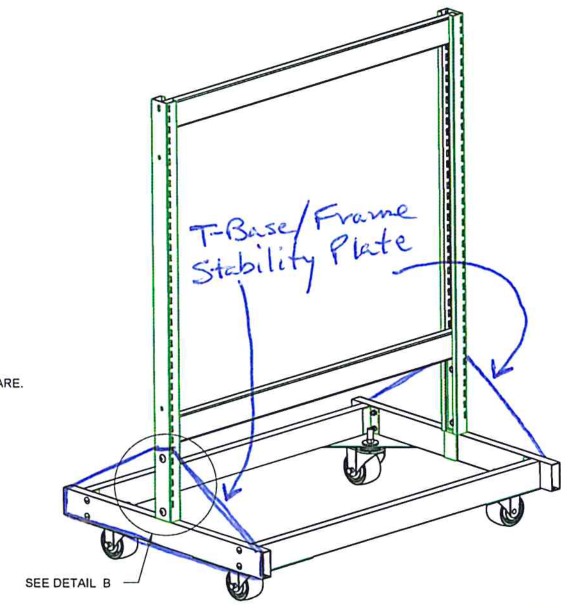

Borroughs CORPORATION
3002 N BURDICK ST
KALAMAZOO, MI 49004-3483

DO NOT SCALE DRAWING
TOLERANCES
UNLESS OTHERWISE SPECIFIED
ANGLES ±1°
LINEAR DIMENSIONS ±1/32

MAT'L	--
GAGE	--
FINISH	--
SCALE	
REF.	--
PAINT	--

DR PJM 10/17/12 — CK – — APVD PJM 10/17/12

NAME: LIBRARY CART ASSEMBLY INSTRUCTIONS

PART NO. --

DWG NO. 50-B-MLPCU6254S-ASY REV --

SYM	ECN NO	REVISION	DATE	BY	CK'D	REL DATE

50-B-MLPCU6254S-ASY